DELTA®

HIGH PERFORMANCE AIR & MOISTURE BARRIERS

TECHNICAL DATA SHEET

DELTA®-STRATUS SA

Self-Adhered Water-resistive Barrier & Air Barrier with High UV Resistance

MATERIAL

DELTA®-STRATUS SA is a 4-layer self-adhered water-resistive barrier (WRB) and air barrier with acrylic coating providing high UV resistance. Two layers of high strength spunbond polypropylene (PP) fabric are thermally bonded to a highly vapor permeable, watertight polymeric middle layer. The acrylic coating provides effective UV protection, allowing for the product to be exposed to sunlight for extended periods without being damaged. DELTA®-STRATUS SA maintains high vapor permeability and has a full surface coating of a high tack adhesive for bonding to common substrates. It has a split release liner for ease of application.

PROPERTIES

DELTA®-STRATUS SA is a vapor permeable WRB, allowing moisture within the building enclosure to escape through the membrane via diffusion. Its permeability and air-tightness make it an ideal air and water-resistive barrier membrane for energy-efficient construction. The watertight membrane helps protect the building enclosure from damaging effects of moisture infiltration. It is an air barrier that meets the industry's most stringent standards. DELTA®-STRATUS SA is light-weight and tear-resistant. This membrane withstands the rigors of jobsites, extended UV exposure during construction, as well as tough wind and weather.

APPLICATION

DELTA®-STRATUS SA is ideal for installations where extended exposure times are expected. DELTA®-STRATUS SA is installed outboard of the sheathing prior to the application of the final cladding system. Use DELTA®-LFS 100% silicone for liquid flashing and sealant applications. Do not use sealants, flashings, products or chemicals that contain surfactants on DELTA® water-resistive and air barrier membranes because they can adversely affect the water hold-out properties of any PP spunbond-based water-resistive barrier. Such products may include asphaltic materials, various chemicals, acid-based silicones, cleaning compounds, and certain formulations of liquid flashings, e.g. specific STP-based materials. Always confirm compatibility with the manufacturer's published technical data sheets and with the manufacturer's technical department. DELTA® Accessories complete an air barrier and WRB system. It may be adhered to concrete, masonry, OSB, plywood, or exterior grade drywall.

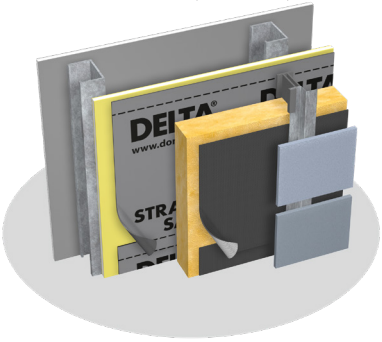

ICC ESR-2932 DELTA® Water-resistive Barriers

DELTA® products support sustainable and energy-efficient building practices, including efforts toward achieving LEED® certification (LEED®) for New Construction & Major Renovations, LEED® for Core and Shell, LEED® for Existing Buildings and LEED® for Homes).

For technical support, call our technical support team at 1-888-433-5824, ext: 326, or visit www.dorken.com.

Technical Data

Product name	DELTA®-STRATUS SA	
Color	gray	
Material	high strength spunbond polypropylene (PP) fabric/film combination with acrylic coating	
Adhesive coating	Full surface coating with vapor permeable pressure-sensitive adhesive	
Water vapor transmission	214 g/m²/24 h	ASTM E96-05, Proc. A
	343 g/m²/24 h	ASTM E96-05, Proc. B
Vapor permeance	31 perms [grains/h/ft²/in Hg]	ASTM E96-05, Proc. A
	50 perms [grains/h/ft²/in Hg]	ASTM E96-05, Proc. B
Tensile strength	MD 107 lbf	ASTM D5034
	XD 100 lbf	
Elongation at break	MD 38 %	ASTM D5034
	XD 60 %	
90° Peel adhesion	Pass	AAMA 711-5.3 (ASTM D3330)
Accelerated aging (UV)	Pass	AAMA 711-5.4
Elevated temperature	Pass (Level 3)	AAMA 711-5.5
Thermal cycling	Pass	AAMA 711-5.6
Adhesion after water immersion	Pass	AAMA 711-5.8
Air Leakage of Air Barrier Assemblies	< 0.2 L/(s•m²) @ 75 Pa (0.04 cfm/ft2 @ 1.57 lb/ft²)	ASTM 2357-11
	Class A1	CAN/ULC-S742-11
Drainage	Pass > 90%	ICC-ES AC38 § 4.3
Air permeance	< 0.02 l/(s x m²) @ 75 Pa	ASTM E2178 CAN/ULC-S741-08
Water resistance hydrostatic pressure	Pass 60 minute Grade D building paper equivalent	ASTM D779-03
Nail Sealability	Pass	ASTM D1970/ D1970M-21 § 7.9
Flame spread	10	ASTM E84-18
	NFPA Class A; IBC Class A	
Smoke developed	90	ASTM E84-18
	NFPA Class A; IBC Class A	
Service temperature	-40 °F to +176 °F (-40 °C to +80 °C)	
Application temperature	Minimum 40 °F (5 °C)	
Roll weight	approx. 44 lb (20 kg)	
Roll length	115 ft (35 m)	
Roll width	4' 11" ft (1.5 m)	
UV (sunlight) exposure	UV/ weather exposure up to 180 days in climate zones 3-8, and up to 150 days in climate zones 1-2. As per good building practice, cover any WRB as soon as possible	
DELTA® Accessories	DELTA®-MULTI BAND 2" x 82' (60 mm x 25m) DELTA®-FLEXX-BAND 4" x 33' (100 mm x 10 m) 6" x 33' (15 cm x 10 m) 9" x 33' (22 cm x 10 m) 12" x 33' (30 cm x 10 m) DELTA®-FLASHING 6" x 75' (150 mm x 22.8 m) 9" x 75' (230 mm x 22.8 m) DELTA®-FAS CORNER DELTA®-TILEXX 310 ml cartridge DELTA®-LFS - 300 ml cartridge DELTA®-HF PRIMER 1.3 gal. (5 L) / pail or DELTA®-ADHESIVE 4.72 gal. (17.9 L) / pail	Working temperature from 40 °F to 104 °F (+5 °C to 40 °C)

DELTA® is a registered trademark of Ewald Dörken AG, Herdecke, Germany

02/23/2023 15

Dörken Systems Inc. · 4655 Delta Way · Beamsville · ON · L3J 0T6 · Canada
Tel.: +1 (905) 563 3255 · Fax: +1 (905) 563 5582 · info@dorken.com · www.dorken.com
A DÖRKENGROUP **company**

Self-Adhered Air and Water-resistive Barriers

See Which One is Best

Performance Criteria	Requirement	Dörken Systems Inc. DELTA®-STRATUS SA	Grace Perm- A-Barrier VPS
Air leakage of air barrier assemblies (ASTM E2357-11) (CAN/ULC-S742-11 Class A1)	< 0.2 L/(s • m^2) @ 75 Pa (0.04 cfm/ft^2 @ 1.57 lb/ft2)	Pass Pass	Pass -
Air permeance (ASTM E2178) (CAN/ULC-S741-08)	< 0.02 L/(s • m^2) @ 75 Pa (0.004 cfm/ft^2 @ 1.57 lb/ft2)	Pass Pass	Pass -
Water resistance hydrostatic pressure (AATCC 127-1985)	55 cm > 5 hours	Pass	Pass
Vapor permeance (ASTM E96-05, Proc. A)	min. 10 perms (per IBC)	31 perms	15 perms
Vapor permeance (ASTM E96-05, Proc. B)	-	50 perms	15 perms
Flame spread (ASTM E84-09)	Class A: < 25	Class A	Class A
Smoke developed (ASTM E84-09)	Class A: < 450	Class A	Class A
90° Peel Adhesion (AAMA 711-07 §5.3)	min. 0.26 N/mm	OSB 0.30 N/mm Plywood 0.28 N/mm Densglass 0.29 N/mm	-
Breaking strength (ASTM D5034-95)	-	MD 107 lbf/XD 100 lbf	MD 40 lb/CD 35 lb
Elongation at break (ASTM D5034-95)	-	MD 38 % XD 60 %	-
ICC Evaluation (AC38)	as per AC38	ICC ESR-2932	-
UV Exposure Time	-	UV/ weather exposure up to 180 days in climate zones 3-8, and up to 150 days in climate zones 1-2	not to exceed 150 days
Manufacturing	-	In house	Manufacturing outsourced

Dörken Systems Inc. · 4655 Delta Way · Beamsville, ON L0R 1B4, Canada · Tel.: +1 (905) 563 3255 · Fax: +1 (905) 563 5582 · info@dorken.com · www.dorken.com
A **DÖRKEN**GROUP company

DELTA®-STRATUS SA

Self-Adhered Vapor Permeable Water-resistive & Air Barrier
Installation Instructions Flange Window Strip-in Method

For other window installation methods, please refer to DELTA®-VENT SA Window Installation Guides that are also suitable for DELTA®-STRATUS SA.

Health and Safety

- Required safety equipment: hard hat, safety boots, gloves, safety glasses, fall arrest equipment.
- Always follow all safety precautions as directed by the Occupational Safety and Health Administration (OSHA-USA) or the Construction Safety Association (Canada).
- Please refer to Safety Data Sheets for all components and observe all recommended safety precautions therein.
- The general codes of practice for protection at work and instructions of the manufacturers for tools and components are to be observed at all times.

Available Accessories

- DELTA®-HF PRIMER. Alternatively, use DELTA®-ADHESIVE LVC or DELTA®-ADHESIVE (cold weather)
- DELTA®-FAS CORNER (pre-fabricated window corner)
- DELTA®-FLEXX-BAND (flexible flashing)
- DELTA®-MULTI-BAND tape
- DELTA®-FLASHING
- DELTA®-TILAXX or DELTA®-THAN

Recommended Tools

- Utility knife
- Measuring tape
- Hand roller (for membrane installation)
- Paint roller (for application of primer)

Substrate Conditions and Preparation

Appropriate substrate conditions are critical to obtain proper adhesion. Ensure surfaces are ready for product installation and are in accordance with these installation instructions.

- All surfaces must be sound, dry, clean and free of dust, oil, grease, ice, dirt, excess mortar or other contaminants detrimental to the adhesion of the membrane.
- Ensure protrusions that may penetrate the membrane are removed from substrate. Mechanical fasteners used to secure substrate shall be set flush with substrate and secured into solid backing.
- If being applied to concrete or masonry substrates, fill voids, gaps and spalled areas in substrate to provide an even plane. Strike masonry joints full-flush.
- Curing compounds or release agents used in concrete construction must be resin-based without oil, wax or pigments.
- New concrete should be cured for a minimum of fourteen (14) days and must be dry prior to primer application.
- Not all product installations require the use of primer. However, in certain exceptions primer may be used to enhance adhesion. The ability of self-adhering membranes to adhere to a substrate may become compromised by irregular surface texture, chemical release agents, moisture content, dirt and debris, or even low temperatures or high wind conditions. An adhesion test is recommended to confirm substrate suitability. Adhesion enhancements are required when an assembly is unable to maintain a continuous and secure installation. Where enhanced adhesion is needed, Dörken Systems Inc. offers DELTA®-HF PRIMER (water-based, highly vapor permeable), DELTA®-ADHESIVE LVC or DELTA®-ADHESIVE (cold weather) for surface preparation.
- Important: apply primers in thin coat

- To ensure the continuity of air and water-resistive barrier, it is essential to install DELTA®-STRATUS SA and all DELTA® accessories in a manner that seals all potential leakage points:
  - Connections of the wall to the roof air barrier
  - Connections of the wall to the foundation
  - Seismic and expansion joints
  - Piping, conduit, duct and similar penetrations
  - Masonry ties, screws, bolts and similar penetrations
  - Changes in plane
  - All other potential air leakage pathways in the building enclosure
- These installation instructions for DELTA®-STRATUS SA are intended only as a guide and are for the convenience of the contractors, specifiers, and other interested parties. The final application and details are the sole responsibility of the design authority on record for the project.

- Applications using cementitious coating directly applied to surface of the DELTA®-STATUS SA are not recommended. For these applications, please call our Technical Support Team: 1-888-433-5824 ext. 326.
- DELTA®-STRATUS SA membrane should be installed at 40ºF (5ºC) and above. In cold weather, store rolls in warm area to enhance adhesion and workability. Do not install DELTA®-STRATUS SA in adverse weather conditions. High winds may hamper application.
- It is recommended that DELTA®-STRATUS SA be installed prior to the installation of seismic straps.
- If sealant is required, DELTA®-THAN or DELTA®-TILAXX is recommended.
- When attaching brick ties for anchoring masonry claddings after the installation of DELTA®-STRATUS SA, install a patch of DELTA®-FLEXX BAND at the penetration site before installing the brick tie. The patch should be of an adequate size to seal only the penetration point.
- Although DELTA®-STRATUS SA is engineered for longer construction schedules it is not designed for permanent UV exposure. Per good building practice, always cover as soon as possible.

Step 1 Installation

- If primer is being used, apply to substrate at recommended application rate. Apply only to areas where membrane will be applied that day.
- Cut DELTA®-STRATUS SA into manageable length. DELTA®-STRATUS SA can be installed vertically or horizontally.
- Starting at the corner of the building, align and position DELTA®-STRATUS SA to substrate. Remove release liner from top half of sheet and press DELTA®-STRATUS SA firmly into place. Ensure proper alignment of membrane to avoid wrinkles.
- Remove bottom half of release liner and press DELTA®-STRATUS SA firmly into place.
- At end/side laps, overlap DELTA®-STRATUS SA by minumum 3 " (75 mm). To ensure air barrier continuity tape laps with DELTA®-MULTI-BAND tape.
- Always begin the installation of DELTA®-STRATUS SA at bottom of the building to ensure proper downward shingling of laps.
- Using hand roller, firmly roll all membrane surfaces to ensure appropriate adhesion.

Step 2 Wall/foundation transition

- If through-wall flashing (DELTA®-TW FLASHING) is installed, DELTA®-STRATUS SA should overlap by minumum of 3" (75 mm).
- If no through-wall flashing is installed, the bottom edge of DELTA®-STRATUS SA should extend beyond the sill plate by at least 2" (50 mm). Seal bottom edge with DELTA®-FLASHING or DELTA®-FLEXX BAND. Use hand roller firmly to ensure appropriate adhesion.

Step 3 Window

- Install DELTA®-FAS CORNER in lower corners of rough opening. Staple on vertical leg for temporary support (see Detail 1).
- Install DELTA®-STRATUS SA membrane below window with cut out minimum 8" (200 mm) above sill. Install DELTA®-FLASHING membrane at sill. Overlap 2" (50 mm) onto vertical DELTA®-STRATUS SA membrane below (see Detail 2).
- Install DELTA®-STRATUS SA membrane strip to wrap jamb. Lap 8" (200 mm) onto face of wall at jamb, minimum 3" (75 mm) at head. Install DELTA®-STRATUS SA membrane at head of rough opening. Lap minimum 8" (200 mm) onto face of wall at head. Install DELTA®-MULTI-BAND tape at overlapped edges of DELTA®-STRATUS SA to ensure airtightness (see Detail 3).
- Install window shims in accordance with window manufacturer's specifications, typically at quarter points of rough opening and under setting block locations for window. Install window in accordance with manufacturer's specifications. Generally, the gap between window and rough opening should be around 1/2" (12 mm) (see Detail 4).

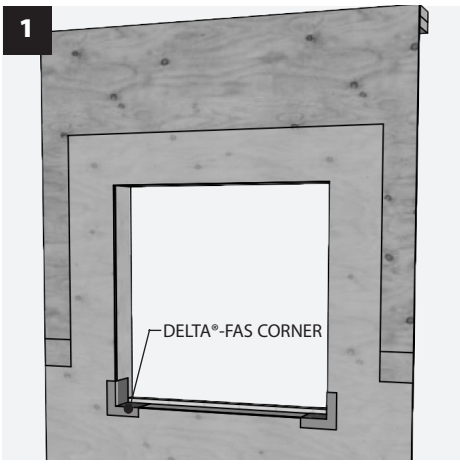

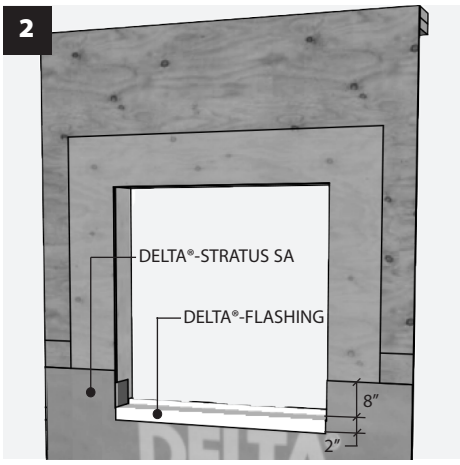

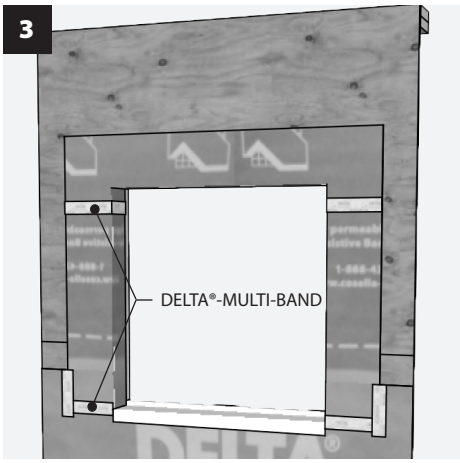

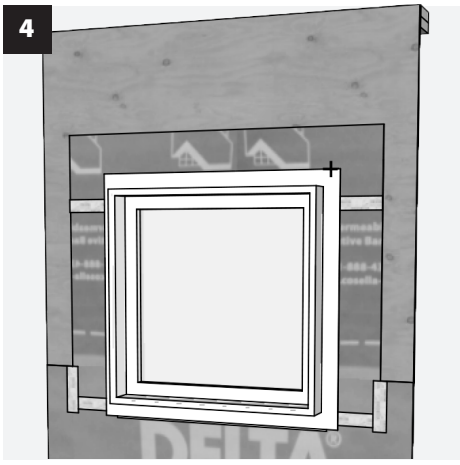

- From interior, install backer rod around the full perimeter of window. Install DELTA®-TILAXX sealant around perimeter of window. Alternate air sealing detail: apply low expansion spray foam around full perimeter of window. Do not seal full cavity to allow drainage from sill flashing.

Step 4 Installation of membrane

- Install DELTA®-STRATUS SA membrane overlapping window flange and extending minimum 3" (75 mm) above top flange.
- Tape DELTA®-STRATUS SA to window flange at both jambs with DELTA®-MULTI-BAND tape or DELTA®-FLASHING 6".
- Install DELTA®-STRATUS SA membrane above head of window, overlapping window flange and lower membrane sheets (see Detail 5).
- Install DELTA®-MULTI-BAND tape at overlapped edges of DELTA®-STRATUS SA to ensure airtightness (see Detail 6).
- Using hand roller, firmly roll all membrane surfaces to ensure appropriate adhesion.

Step 5 Penetrations

- Cut DELTA®-STRATUS SA around penetrations as tightly as possible.
- Seal gaps between penetration and substrate with DELTA®-TILAXX or DELTA®-THAN sealant.
- Install DELTA®-FLEXX BAND around the penetration (see Detail 7).

Step 6 Inspection

- Inspect the DELTA®-STRATUS SA for rips, tears, or other installation deficiencies in the continuity. Tape rips, tears or holes smaller than 2" (50 mm) with DELTA®-MULTI BAND.
- For holes greater than 2" (50 mm), a patch is required.
  - Cut a patch minimum 6" (150 mm) larger than the hole. Install patch of DELTA®-STRATUS SA over the hole.
  - Remove release liner, press the patch firmly into place, and hand roll.
  - Tape the patch with DELTA®-MULTI BAND in the following order:
    1. Bottom
    2. Sides
    3. Top

Step 7

- Clean up all excess materials and dispose of properly.

For technical support, call our Technical Support Team at 1-888-433-5824 extension 326, or visit www.dorken.com

5

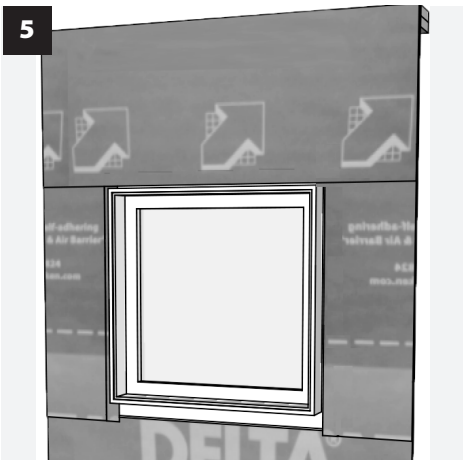

6

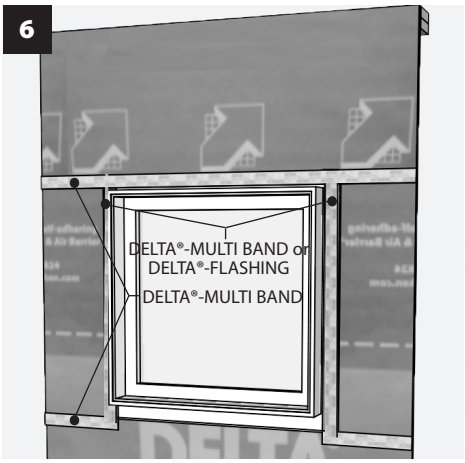

7

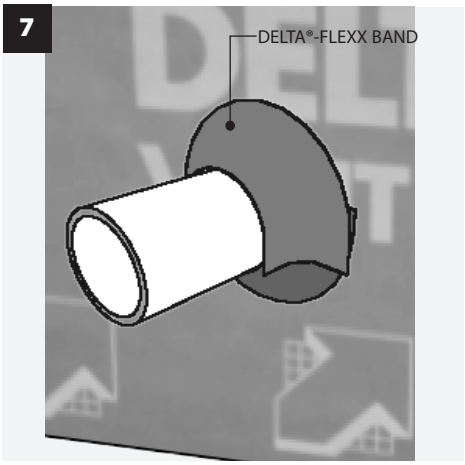

DELTA® is a registered trademark of Ewald Dörken AG, Herdecke, Germany

Dörken Systems Inc.
4655 Delta Way
Beamsville, Ontario
L0R 1B4
1-(905) 563-3255
Fax: (905) 563-5582
info@dorken.com
www.dorken.com

A **DÖRKEN**GROUP **company**

DELTA®-branded quality products manufactured by Dörken.

The information printed in this brochure reflects product information and specifications at the date of printing. The manufacturer reserves the right to make changes when necessary. All rights reserved.

05/01/2019 (3)

DÖRKEN SYSTEMS INC. GUIDE NOTE: This master specification section includes DÖRKEN SYSTEMS INC. GUIDE NOTES identified as "DÖRKEN SYSTEMS INC. GUIDE NOTE" for information purposes and to assist the specification writer in making appropriate decisions. The DÖRKEN SYSTEMS INC GUIDE NOTE always immediately precedes the text to which it is referring. The section serves as a guideline only and should be edited with deletions and additions to meet specific project requirements.

DÖRKEN SYSTEMS INC. GUIDE NOTE: This specification section follows the recommendations of the Construction Specifications Institute, Project Resource Manual including MasterFormat™, SectionFormat™, and PageFormat™. Optional text is indicated by square brackets []; delete the optional text including the brackets in the final copy of the specification. Delete the DÖRKEN SYSTEMS INC. GUIDE NOTES in the final copy of the specification. Trade/brand names with appropriate product model numbers, styles and types are used in DÖRKEN SYSTEMS INC. GUIDE NOTES and in the specification text Article or Paragraph titled "Acceptable Material".

DÖRKEN SYSTEMS INC. GUIDE NOTE: If this section is to be used to specify an Air Barrier system, then use section number 07 27 00. If this section is to be used to specify a Water-resistive Barrier system, then use section number 07 28 00.

DÖRKEN SYSTEMS INC. GUIDE NOTE: This specification section is based upon the Dörken Systems Inc. DELTA®-STRATUS SA product line.

1 GENERAL

1.01 SUMMARY OF WORK

A. This Section specifies self-adhered water-resistive barriers, air barriers, and accessories.

1.02 RELATED REQUIREMENTS

DÖRKEN SYSTEMS INC. GUIDE NOTE: Include in this Paragraph only those sections and documents that directly affect the work of this section. If a reader of this section could reasonably expect to find a product or component specified in this section, but it is actually specified elsewhere, then the related section number(s) should be listed in the Paragraph below. Do not include Division 00 Documents or Division 01 Sections since it is assumed that all technical sections are related to all project Division 00 Documents and Division 01 Sections to some degree. Refer to other documents with caution since referencing them may cause them to be considered a legal part of the Contract. Edit the following paragraphs to suit specific project conditions.

A. Section [_____].

DÖRKEN SYSTEMS INC. GUIDE NOTE: In the following Article, include only those reference standards which appear in the finished version of the project specification.

1.03 REFERENCE STANDARDS

A. Air Barrier Association of America (ABAA)
1. ABAA [2011], Installer's Certification Program.

DÖRKEN SYSTEMS INC. GUIDE NOTE: When this section was developed, ABAA had not yet published their installation procedures for air or water-resistive barriers. Check with ABAA for actual installation guideline publication date and title before including the following paragraph in the project specification.

2. ABAA [2012], Water-resistive Barrier Installation Guideline.

B. American Association of Textile Chemists and Colorists (AATCC)

1. AATCC 127 [2008], Water Resistance: Hydrostatic Penetration Test.

C. American Architectural Manufacturer's Association (AAMA)
AAMA 711-[2007], Voluntary Specification for Self Adhering Flashing Used for Installation of Exterior Wall Fenestration Products.

D. ASTM International (ASTM).
1. ASTM D1204-[2008], Standard Test Method for Linear Dimensional Changes of Nonrigid Thermoplastic Sheeting or Film at Elevated Temperature.

2. ASTM D3330-[2010], Standard Test Method for Peel Adhesion of Pressure-Sensitive Tape.
3. ASTM D5034-09, Standard Test Method for Breaking Strength and Elongation of Textile Fabrics (Grab Test)
4. ASTM E84-[2010b], Standard Test Method for Surface Burning Characteristics of Building Materials.
5. ASTM E96/96M-[2010], Standard Test Methods for Water Vapor Transmission of Materials.
6. ASTM E154-[2008a], Standard Test Methods for Water Vapor Retarders Used in Contact with Earth Under Concrete Slabs, on Walls, or as Ground Cover.
7. ASTM E2178-[2003] and CAN/ULC-S741-08, Standard Test Method for Air Permeance of Building Materials.8.
8. ASTM E2357, Standard Test Method for Determining Air Leakage of Air Barrier Assemblies.
9. CAN/ULC-S742-11, Standard for Air Barrier Assemblies.

E. US Green Building Council (USGBC).
1. LEED® NC Version 4.0-[2018], LEED (Leadership in Energy and Environmental Design): Green Building Rating System Reference Package For New Construction and Major Renovations.

1.04 ADMINISTRATIVE REQUIREMENTS

A. Co-ordination: Co-ordinate work of this Section with work of other trades for proper time and sequence to avoid construction delays.

B. Pre-installation Meeting: Convene pre-installation meeting after Award of Contract and one week prior to commencing work of this Section to verify project requirements, substrate conditions and coordination with other building sub-trades, and to review manufacturer's written installation instructions.
1. Comply with Section 01 31 19 - Project Meetings and co-ordinate with other similar pre-installation meetings.
2. Notify attendees 2 weeks prior to meeting and ensure meeting attendees include as minimum:
   a. Owner;
   b. Consultant;
   c. [Air] [Water-resistive] barrier installer;
   d. Manufacturer's Technical Representative.
3. Ensure meeting agenda includes review of methods and procedures related to [air] [water-resistive] barrier installation including co-ordination with related work.
4. Record meeting proceedings including corrective measures and other actions required to ensure successful completion of work and distribute to each attendee within 1 week of meeting.

DÖRKEN SYSTEMS INC. GUIDE NOTE: Article below includes submittal of relevant data to be furnished by Contractor.

1.05 ACTION AND INFORMATIONAL SUBMITTALS

A. Make submittals in accordance with Contract Conditions and Section 01 33 00 - Submittal Procedures.

B. Product Data: Submit product data including manufacturer's literature for [air] [water-resistive] barrier membrane and accessories, indicating compliance with specified requirements and material characteristics.
1. Submit list on [air] [water-resistive] barrier manufacturer's letterhead of materials, components and accessories to be incorporated into Work.
2. MSDS report.
3. Include product names, types and series numbers.
4. Include contact information for manufacturer and their representative for this Project.

C. Samples:
1. Submit duplicate 12 x 12 inches sample of membrane.
2. Submit duplicate 12 inches long samples of seam tape and each type of flashing materials.

D. Test Reports:
1. Submit test reports showing compliance with specified performance characteristics and physical properties including air permeance, water vapour permeance and structural performance.

E. Field Reports: Submit manufacturer's field reports within 3 days of each manufacturer representative's site visit and inspection.

F. Sustainable Design (LEED).
1. LEED Submittals: In accordance with Section [01 35 21 – LEED Requirements]

G. Installer Qualifications:
1. Submit [verification of manufacturer's approval of installer] [letter verifying installer's experience with work similar to work of this Section] [verification of ABAA certification].

1.06 CLOSEOUT SUBMITTALS

A. Operation and Maintenance Data: Supply maintenance data for [air] [water-resistive] barrier materials for incorporation into manual specified in Section 01 78 00 - Closeout Submittals.

DÖRKEN SYSTEMS INC. GUIDE NOTE: If LEED is not a part of the project delete the following Paragraph in its entirety.

B. Sustainable Design Closeout Documentation (LEED).
1. Provide calculations on end-of-project recycling rates, salvage rates, and landfill rates for work of this Section demonstrating percentage of construction wastes which were recycled.
2. Submit verification from recycling facility showing receipt of materials.

C. Record Documentation: In accordance with Section 01 78 00 - Closeout Submittals.
1. List materials used in [air] [water-resistive] barrier work.
2. Warranty: Submit warranty documents specified.

1.07 QUALITY ASSURANCE

A. Installer Quality Assurance: [manufacturer's approval of installer] [[2] years' experience with work similar to work of this Section] [ABAA certification]

B. Sustainability Standards Certification (LEED).
1. LEED NC Version 4.0 submittals: In accordance with Section 01 35 21 - LEED Requirements.

C. Mock-up: Construct full size 10 ft x 10 ft mock-up of wall showing [air] [water-resistive] barrier using proposed procedures, materials and quality of work where directed by Consultant [and in accordance with Section 01 43 00 - Quality Assurance].
1. Include examples of window frame, door frame, interior corner, exterior corner and common protrusions or penetrations of barrier membrane.
2. Purpose: To judge quality of work and material installation.
3. Allow Consultant [24] hours minimum prior to inspection of mock-up.
4. Do not proceed with work prior to receipt of written acceptance of mock-up by Consultant.
5. When accepted, mock-up will demonstrate minimum standard of quality required for work of this Section.
6. Approved mock-up will [not] remain part of finished work.

DÖRKEN SYSTEMS INC. GUIDE NOTE: The following Article although not part of Quality Assurance, can be used to enhance the quality of materials by ensuring that they are delivered and handled properly at the work site.

1.08 DELIVERY STORAGE AND HANDLING

A. Delivery and Acceptance Requirements:
1. Deliver material in accordance with Section 01 61 00 - Common Product Requirements.
2. Deliver materials and components in manufacture's original packaging with identification labels intact and in sizes to suit project.

B. Storage and Handling Requirements: Store materials off ground and protected from exposure to harmful weather conditions and at temperature conditions recommended by manufacturer.
1. Ensure materials are protected from sunlight and UV radiation.

C. Packaging Waste Management:

DÖRKEN SYSTEMS INC. GUIDE NOTE: For smaller projects that do not have a separate Section for waste management and disposal, delete the following paragraph.

1. Separate and recycle waste packaging materials in accordance with Section 01 74 19 - Construction Waste Management and Disposal.
2. Remove waste packaging materials from site and dispose of packaging materials at appropriate recycling facilities.

DÖRKEN SYSTEMS INC. GUIDE NOTE: For smaller projects that do not have a Waste Management Plan, delete the option referring to a Waste Management Plan.

3. Collect and separate for disposal paper and plastic material in appropriate on-site storage containers for recycling [in accordance with Waste Management Plan].

1.09 WARRANTY

A. Project Warranty: Refer to Contract Conditions for project warranty provisions.

B. Manufacturer's warranty: Submit, for Owner's acceptance, manufacturer's standard warranty document executed by authorized company official. Manufacturer's warranty is in addition to and not intended to limit other rights Owner may have under Contract Conditions.
1. [10] years limited material warranty.

DÖRKEN SYSTEMS INC. GUIDE NOTE: Coordinate article below with manufacturer's warranty requirements.

C. Warranty period: [1] years commencing on Date of Substantial Performance of Work.

2 PRODUCTS

2.01 MANUFACTURER

A. Manufacturer: Dörken Systems Inc., 4655 Delta Way, Beamsville, Ontario, L0R 1B4, Canada, Phone: 1-905-563-3255, Toll Free: 1-888-4DELTA4 (1-888-433-5824), e-mail: info@dorken.com , URL: http://www.dorken.com.

2.02 DESCRIPTION

A. Vapor permeable [air] [water-resistive] barrier, highly tear-resistant 3-layer membrane, with 2 outer layers of spun-bonded polypropylene fabric, water-tight polymeric middle layer and highly aggressive adhesive coating on the back and a special acrylic UV resistant coating on the front.
1. Ensure materials meet requirements of AAMA 711.

2.03 DESIGN CRITERIA

A. Water Vapor Permeance: To ASTM E96 (Procedure A) 42 perms, (Procedure B) 60 perms.

B. Water Vapor Transmission: To ASTM E96 (Procedure A), 289 $g/m^2/24$ hr, (Procedure B) 412 $g/m^2/24$ hr.

C. Air Permeance: To ASTM E2178, <0.0034 cfm/sq ft @ 0.3 inches wg (< 0.02 l/(s x m^2) @ 75 Pa).

D. Breaking Strength: To ASTM D5034, 107 MD lbf, 100 CD lbf.

E. Elongation at Break: To ASTM D5034, MD 38%, CD 60%

F. 90° Peel Adhesion: To ASTM D3330, Pass

G. Accelerated aging (U.V): Pass, ASTM D3330

H. Peel Adhesion at Elevated Temperatures (176° F): To ASTM D3330, Pass (Level 3).

I. Adhesion after water immersion: Pass, ASTM D3330

J. Water resistance hydrostatic pressure: >60 minutes, Meet Grade D 60 building paper, ASTM D779

K. Fire Rating Characteristics: To ASTM E84:
1. Rating: NFPA Class A, IBC Class 1 minimum.
2. Flame Spread: 10 maximum.
3. Smoke Developed: 90 maximum.

2.04 MATERIALS

A. [Air] [Water-resistive] Barrier for Walls: Self-adhesive vapor permeable [air] [water-resistive] barrier; highly tear-resistant 4-layer membrane, with two outer layers of spun-bonded polypropylene fabric and a water-tight polymeric middle layer and an acrylic UV resistant coating on front side providing high UV resistance.
1. Weight: 44 lb/roll nominal.
2. Roll Dimensions: [4’11” (1.5 m) x 115’ (35 m)].
3. Color: Matte Gray.

B. Acceptable Material: Dörken Systems Inc., DELTA®-STRATUS SA.

2.05 ACCESSORIES

A. Seam tape: Acrylic-based adhesive tape in accordance with [air] [water-resistive] barrier manufacturer’s written recommendations.
1. Acceptable material: Dörken Systems Inc., DELTA®-MULTIBAND (2-1/2” x 65’ 7”)

B. Flashings: Self-adhering, butyl-rubber based [air] [water-resistive] flashing membrane [in accordance with [air] [water-resistive] barrier manufacturer’s written recommendations] [and] [in accordance with Section 07 65 00 – Flexible Flashing]

DÖRKEN SYSTEMS INC. GUIDE NOTE: Specify DELTA®-FLASHING for flashing around windows, doors and general flashing areas.

1. Acceptable material: Dörken Systems Inc., DELTA®-FLASHING [(4” x 75’)] [9” x 75’)].

C. Penetration Flashings: Stretchable butyl-rubber based adhesive on non-woven fabric] flashing membrane [in accordance with [air] [water-resistive] barrier manufacturer’s written recommendations.

DÖRKEN SYSTEMS INC. GUIDE NOTE: Specify DELTA®-FLEXX BAND for flashing around penetrations and protrusions.

1. Acceptable material: Dörken Systems Inc, DELTA®-FLEXX BAND 4” x 33”.

D. Sealants and Adhesives: Elastomeric sealant and adhesive in accordance with [[air] [water-resistive] barrier manufacturer’s written recommendations] [Section 07 92 00 – Joint Sealants].
1. Ensure sealants are compatible with adjacent materials.
2. Acceptable material: [Dörken Systems Inc., DELTA®-THAN, DELTA®-TILAXX].

E. Window Corner: Prefabricated rubber-compound window corner.
1. Acceptable materials: Dörken Systems Inc., DELTA®-FAS CORNER.

F. Primers: In accordance [air] [water-resistive] barrier manufacturer's written recommendations.
1. Acceptable materials: Dörken Systems Inc., DELTA®-HF PRIMER or DELTA®-ADHESIVE LVC or DELTA®-ADHESIVE (cold weather application).

G. Flexible Membrane Through-wall Flashing: Self-adhering, butyl-rubber based flashing membrane.
1. Acceptable materials: Dörken Systems Inc., DELTA®-TW FLASHING (18" x 75').

2.06 PRODUCT SUBSTITUTIONS

A. Ensure all accessories such as seam tape, flashing membranes, window corners, and sealants come from same source as [air] [water-resistive] barrier membrane.

B. Substitutions: [In accordance with Section 01 23 13 - Product Substitution Procedures] [No substitutions permitted].

3 EXECUTION

3.01 INSTALLERS

DÖRKEN SYSTEMS INC. GUIDE NOTE: [Manufacturer] authorized installers use only [Manufacturer] manufactured or approved components. Other installers may substitute other manufacturer's materials.

A. Use only [Dörken Systems Inc. authorized installers for] [installers with 2 years minimum experience in work similar to] [ABAA certified installers for] work of this Section.

3.02 EXAMINATION

A. Verification of Conditions: Verify that conditions of substrate previously installed under other Sections or Contracts are acceptable for [air] [water-resistive] barrier installation in accordance with manufacturer's written recommendations.
1. Visually inspect substrate in presence of Consultant.
2. Inform Consultant of unacceptable conditions immediately upon discovery.
3. Proceed with installation only after unacceptable conditions have been remedied and after receipt of written approval to proceed from Consultant.

3.03 PREPARATION

A. Ensure step flashings and kick-out flashings are installed before beginning installation of [air] [water-resistive] membrane.

B. Ensure protrusions that may penetrate [air] [water-resistive] barrier membrane are removed before beginning installation.

3.04 INSTALLATION

DÖRKEN SYSTEMS INC. GUIDE NOTE: Refer to the air or water-resistive barrier manufacturer's current installation guide for detailed information regarding specific details and integration of auxiliary materials.

A. Install [air] [water-resistive] barrier before installation of windows and doors in accordance with manufacturer's written recommendations.

DÖRKEN SYSTEMS INC. GUIDE NOTE: When this section was developed, ABAA had not yet published their installation procedures. Check with ABAA for actual installation guideline publication before including the following paragraph in the project specification.

B. Do installation in accordance with ABAA written recommendations for installation of [air] [water-resistive] barriers.

C. Unroll [air] [water-resistive] barrier with printed side out, wrapping entire building, including rough openings for windows, doors and other protrusions or penetrations.
1. If required, prime substrate before applying [air] [water-resistive] barrier in accordance with manufacturer's written recommendations.
a. Allow to dry 120 minutes or until tacky (depending on weather conditions) before applying [air] [water-resistive] barrier.
2. Install [air] [water-resistive] barrier plumb and level to exterior face of structural [sheathing board] [insulation board] [exterior gypsum board] members in accordance with manufacturer written recommendations.
3. Ensure [air] [water-resistive] barrier is installed with printed side facing installer.
4. Remove release liner from back of membrane and press firmly onto substrate.
a. Roll firmly in place with hand roller.

D. Start installation of [air] [water-resistive] barrier at building corner, leaving 6-12 inches of membrane extended beyond corner.

E. Install horizontally starting at bottom of wall.
1. Overlap [air] [water-resistive] barrier membrane as follows:
a. Exterior Corners: [12] inches minimum.
b. Vertical seams: [4] inches minimum.
c. Horizontal seams: [2] inches minimum. Remove release liner and press firmly together
d. Other seams, joints or at protrusions and penetrations: [4] inches minimum.

F. Sill Plate Interface: Extend lower edge of [air] [water-resistive] barrier over sill plate interface 3 - 6 inches.
1. Adhere to substrate by removing release liner in accordance with [air] [water-resistive] barrier manufacturer's written recommendation.

G. Ensure installed [air] [water-resistive] barrier is not exposed to UV for longer than 150 days in climate zones 1-2 or 180 days in climate zones 3-8.

3.05 FIELD QUALITY CONTROL

A. Field Inspection: Coordinate field inspection in accordance with Section [01 45 00 - Quality Control].

B. Site Installation Tolerances:
1.

DÖRKEN SYSTEMS INC. GUIDE NOTE: Specify requirements if manufacturers are to provide field quality control with onsite personnel for instruction or supervision of product installation, application, erection or construction. Manufacturer field reports are included under PART 1, Action and Informational Submittals.

C. Manufacturer's Services:

DÖRKEN SYSTEMS INC. GUIDE NOTE: Use the following Paragraphs only when manufacture's field services are provided and are required to verify the quality of the installed components. Establish the number and duration of periodic site visits required by manufacturer and specify below. Consult manufacturer for services required. Delete if field services are not required.

1. Coordinate manufacturer's services with Section [01 45 00 - Quality Control].
a. Have manufacturer review work involved in handling, installation, protection, and cleaning of [air] [water-resistive] barrier and components, and submit written reports in acceptable format to verify compliance of Work with Contract conditions.
2. Manufacturer's Field Services: Provide manufacturer's field services consisting of product use recommendations and periodic site visits for product installation review in accordance with manufacturer's instructions.
a. Report any inconsistencies from manufacturer's recommendations immediately to Consultant.
3. Schedule site visits to review work at stages listed:
a. As required by consultant.

b. Obtain reports within three days of review and submit immediately to Consultant.

3.06 CLEANING

DÖRKEN SYSTEMS INC. GUIDE NOTE: For smaller projects that do not have a separate Division 01 Section for cleaning, delete the reference to Section 01 74 00 – Cleaning in the following two Paragraphs.

A. Progress Cleaning: Perform cleanup as work progresses [in accordance with Section 01 74 00 - Cleaning and Waste Management].
   1. Leave work area clean at end of each day.

B. Final Cleaning: Upon completion, remove surplus materials, rubbish, tools, and equipment [in accordance with Section 01 74 00 – Cleaning and Waste Management].

C. Waste Management:
   1. Co-ordinate recycling of waste materials with 01 74 19 - Construction Waste Management and Disposal.
   2. Collect recyclable waste and dispose of or recycle field generated construction waste created during construction or final cleaning related to work of this Section.
   3. Remove recycling containers and bins from site and dispose of materials at appropriate facility.

3.07 PROTECTION

A. Protect installed products and components from damage during construction.

B. Repair damage to adjacent materials caused by [air] [water-resistive] barrier installation.

END OF SECTION [07 27 00] [07 28 00] – [AIR] [WATER-RESISTIVE] BARRIERS

DELTA®

HIGH PERFORMANCE AIR & MOISTURE BARRIERS

DÖRKEN

DELTA®-STRATUS SA

Vapor Permeable, Self-adhering Water-resistive Barrier & Air Barrier with High UV Resistance.

High Performance Air & Moisture Barrier for Extended Exposure.

Fully Adhered:

DELTA®-STRATUS SA

The high performance solution for energy efficient wall systems and longer construction cycles.

Only air and water-resistive barrier in the industry with a UV-resistant coating.

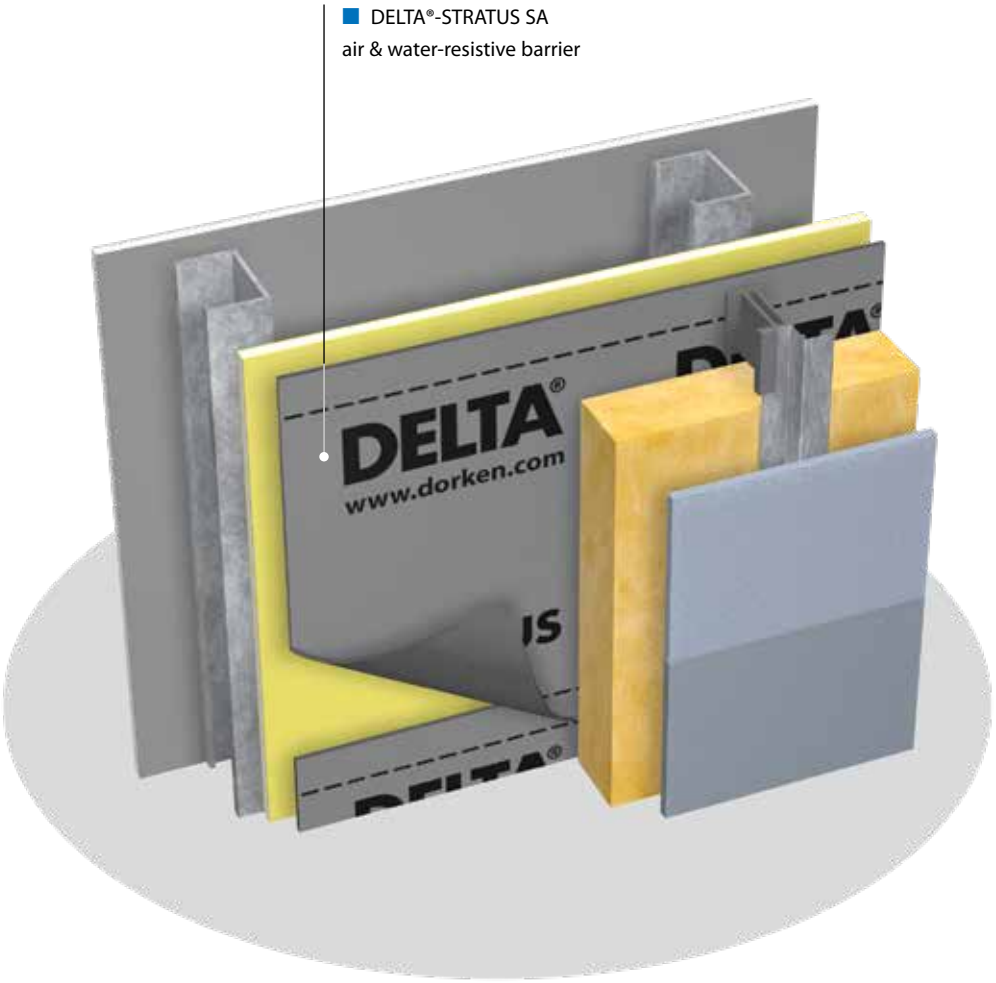

DELTA® quality branded products made by Dörken.

- Aggressively self-adhesive.
- Highly vapor permeable (50 perms).
- Specifically engineered for longer construction cycles.
- UV/weather exposure up to 180 days in climate zones 3-8 or up to 150 days in climate zones 1-2.
- Meets the requirements of IBC 2015 & NBC 2015.
- Improves energy efficiency.
- Enhances drying ability of building enclosure.
- Helps to ensure a healthy and comfortable interior climate.
- Easy to install.
- Matte gray color reduces irritating glare during installation.
- NFPA 285 compliant assemblies (contact Technical Department for details).

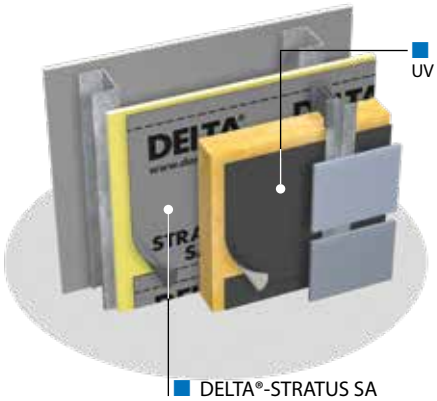

Technical Data Overview:

Color	gray
Vapor permeance	31 perms [grains/h/ft²/in Hg] ASTM E96-05, Proc. A 50 perms [grains/h/ft²/in Hg] ASTM E96-05, Proc. B
Water vapor transmission	214 g/m²/24 h ASTM E96-05, Proc. A 343 g/m²/24 h ASTM E96-05, Proc. B
Tensile strength	MD 107 lbf ASTM D5034 XD 100 lbf
Elongation at break	MD 38 % ASTM D5034 XD 60 %
Water penetration resistance	No Leakage AATCC 127-1985
Air permeance	< 0.02 l/(s x m²) @ 75 Pa ASTM E2178
Flame spread	10 ASTM E84-18 NFPA Class A; IBC Class A
Smoke developed	90 ASTM E84-18 NFPA Class A; IBC Class A
Temperature range	-40 °F to +176 °F (-40 °C to +80 °C)
Roll length	115' (35 m)
Roll width	4.92' (1.5 m)

See Technical Data Sheet for further information.

DELTA®

HIGH PERFORMANCE AIR & MOISTURE BARRIERS

DÖRKEN

Technical Memorandum

Cold Weather Application of DELTA® Self-adhering Membranes

October 2019 Edition

This information is applicable for the following membranes:

- DELTA®-VENT SA
- DELTA®-STRATUS SA
- DELTA®-FASSADE SA

DELTA® Self-adhering (SA) membranes have a recommended application temperature of 40° Fahrenheit (5° Celsius) or above per our Technical Data Sheets.

It should be noted that, as with any application, the installer is ultimately responsible for ensuring effective adhesion. Please refer to the Technical Data Sheet and Installation Instructions for the DELTA® SA membrane being used for complete information.

The adhesive on DELTA® SA membranes is a pressure-sensitive adhesive. As temperatures drop, all adhesives change in performance characteristics. However, the in-situ performance characteristics of the membrane are not affected in any way. DELTA® SA membranes will continue to provide the high performance expected, regardless of the temperature at which they were adhered.

Best practices are always recommended: Installation at temperatures of +40° F (+5° C) and above will yield optimum adhesion. For installations below +40° F (+5° C) the following application procedures are recommended to obtain effective adhesion:

- Keep DELTA® SA membrane rolls and accessories stored at temperatures above +40° F (+5° C) until the time of application.
- Substrate must be clean, dry, and free of frost and ice.
- Use DELTA®- ADHESIVE LVC or DELTA®-ADHESIVE to prime substrates and aid in adhesion.
- Wood substrates must meet USDA recommendations for dry lumber at time of use (U.S.D.A. Forest Service "Moisture Content of Wood" research note FPL – 0226 1973 table 1)
- Use a rubber hand roller to apply pressure to the membrane during installation. This is a standard recommendation for all installations, but it is especially important during cold weather installations.
- Additional time and pressure should be focused on details, laps and perimeters.

As the temperatures get colder, it is more critical to adhere to the recommendations noted above. Periodic reviews (weekly or as needed) of the product application during the colder months are recommended to help ensure effective adhesion.

Because the condition of the substrate will have a significant impact on adhesion, standard surface preparation and considerations must be followed as listed in each of the Installation Instructions for DELTA® SA membranes:

Substrate Conditions and Preparation

- Appropriate substrate conditions are critical to obtain proper adhesion. Ensure surfaces are ready for product installation and are in accordance with these installation instructions.
- All surfaces must be sound, dry, clean and free of dust, oil, grease, ice, dirt, excess mortar or other contaminants detrimental to the adhesion of the membrane.
- Ensure protrusions that may penetrate the membrane are removed from substrate. Mechanical fasteners used to secure substrate shall be set flush with substrate and secured into solid backing.
- If being applied to concrete or masonry substrates, fill voids, gaps and spalled areas in substrate to provide an even plane. Strike masonry joints full-flush.
- Curing compounds or release agents used in concrete construction must be resin-based without oil, wax or pigments.
- New concrete should be cured for a minimum of fourteen (14) days and must be dry prior to primer application.
- Not all product installations require the use of primer. However, in certain exceptions primer may be used to enhance adhesion. The ability of self-adhering membranes to adhere to a substrate may become compromised by irregular surface texture, chemical release agents, moisture content, dirt and debris, or even low temperatures or high wind conditions. An adhesion test is recommended to confirm substrate suitability.
- Adhesion enhancements are required when an assembly is unable to maintain a continuous and secure installation. Where enhanced adhesion is needed, Dörken Systems Inc. offers DELTA®-HF PRIMER (water-based, highly vapor permeable) (store and use at 40° F (5° C) and above), DELTA®-ADHESIVE LVC or DELTA®-ADHESIVE (cold weather) for surface preparation.
- Important: apply primers in thin coat. If primers are applied at a higher rate than recommended, it will not aid with adhesion. Always apply primers at recommended application rate.

DELTA® is a registered trademark of Ewald Dörken AG, Herdecke, Germany.

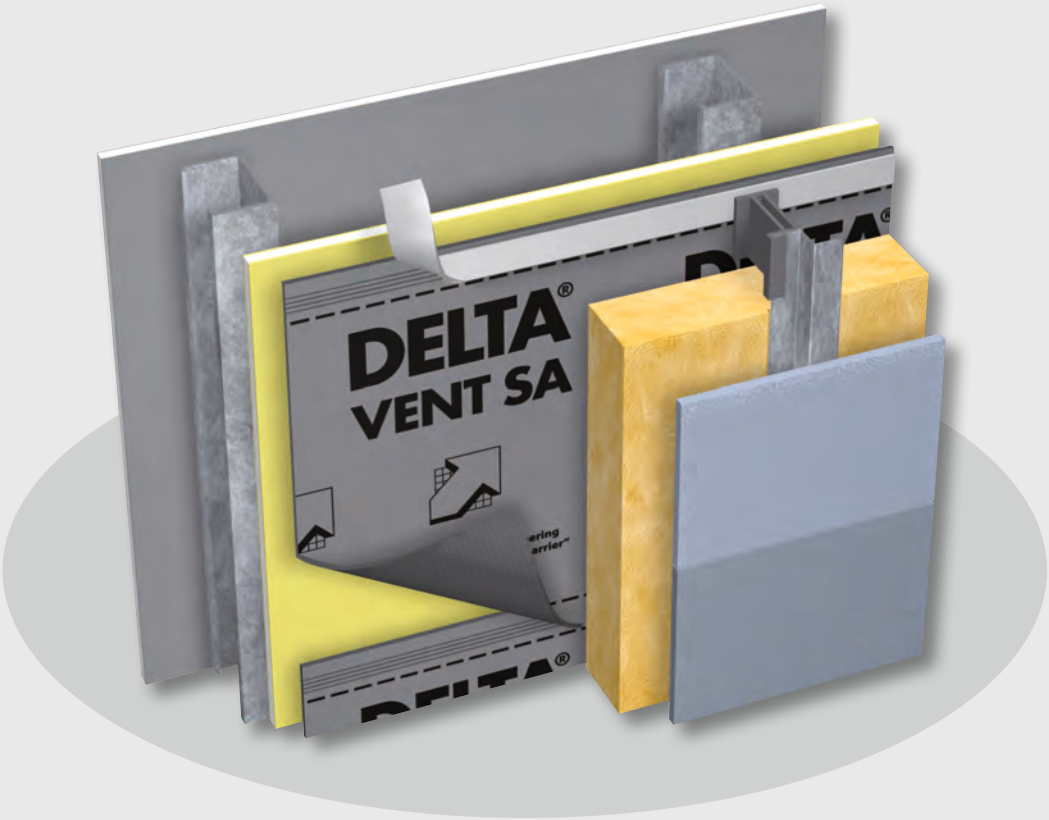

Dörken Systems Inc. · 4655 Delta Way · Beamsville, ON L0R 1B4, Canada
Tel.: +1 (905) 563 3255 · Fax: +1 (905) 563 5582 · info@dorken.com · www.dorken.com
A DÖRKENGROUP **company**

DELTA®-Accessories for DELTA®-STRATUS SA.

Dörken makes your life easier – systematically.

DELTA®-MULTI BAND
pure acrylic adhesive tape used at overlaps of DELTA® air & water-resistive barriers.

DELTA®-FLASHING
used to seal openings for windows and doors to complete the DELTA® air & WRB system.

DELTA®-FLEXX-BAND
stretchable butyl rubber tape used at penetrations.

DELTA®-FAS CORNER
preformed to make corners in window and door openings air and water tight.

DELTA®-TILAXX
high-performance adhesive and sealant specifically designed for use with all DELTA® air-, vapor-, and water-resistive barriers.

DELTA®-HF PRIMER
is a solvent-free primer for most construction substrates.

DELTA® is a registered trademark of Ewald Dörken AG, Herdecke, Germany.

DELTA®

Dörken Systems Inc.
4655 Delta Way
Beamsville,
ON L0R 1B4, Canada
Tel.: +1 (905) 563 3255
Fax: +1 (905) 563 5582
info@dorken.com
www.dorken.com

A DÖRKENGROUP company

The information printed in this brochure reflects product information and specifications at the date of printing. The manufacturer reserves the right to make changes when necessary.
All rights reserved.
DELTA®-branded quality products manufactured by Dörken.

Visit us on:

LinkedIn Twitter YouTube Pinterest

air barrier abaa association of america

bimobject CADdetails BSD speclink